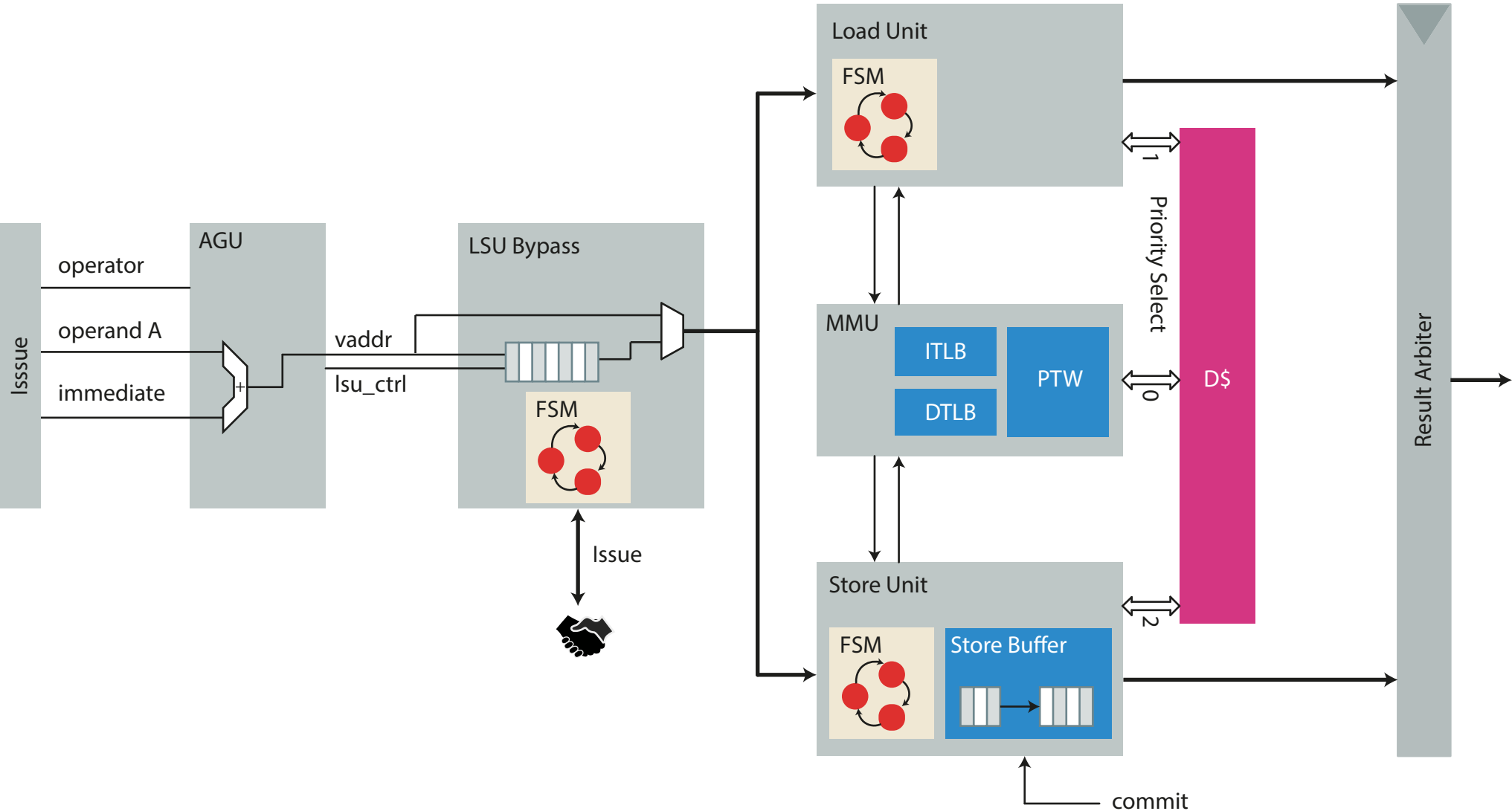
Isssue
operator
operand A
immediate
AGU
+
vaddr
lsu_ctrl
LSU Bypass
FSM
Issue
Load Unit
FSM
MMU
ITLB
DTLB
PTW
Store Unit
FSM
Store Buffer
commit
1
0
2
Priority Select
D$
Result Arbiter