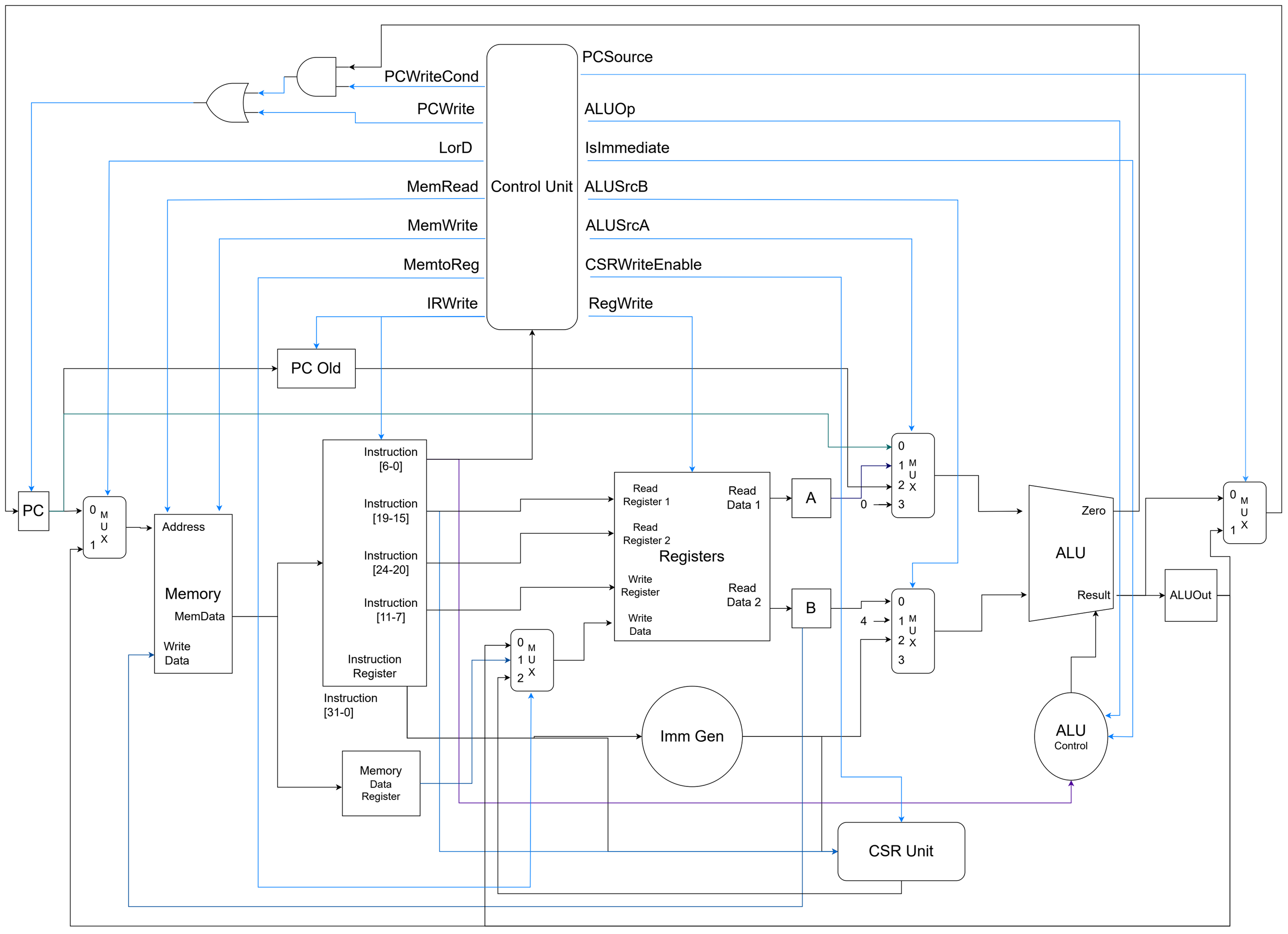
PCSource
PCWriteCond
PCWrite
ALUOp
LorD
IsImmediate
MemRead
Control Unit
ALUSrcB
MemWrite
ALUSrcA
MemtoReg
CSRWriteEnable
IRWrite
RegWrite
PC Old
PC
0
M
U
X
1
Address
Memory
MemData
Write
Data
Instruction
[6-0]
Instruction
[19-15]
Instruction
[24-20]
Instruction
[11-7]
Instruction
Register
Instruction
[31-0]
Read
Register 1
Read
Register 2
Registers
Write
Register
Write
Data
Read
Data 1
Read
Data 2
A
B
0
1
2
3
4
Zero
ALU
Result
ALUOut
Imm Gen
ALU
Control
Memory
Data
Register
CSR Unit